2500 SX/20 (250-4077) Layout Faxback Doc. # 1194
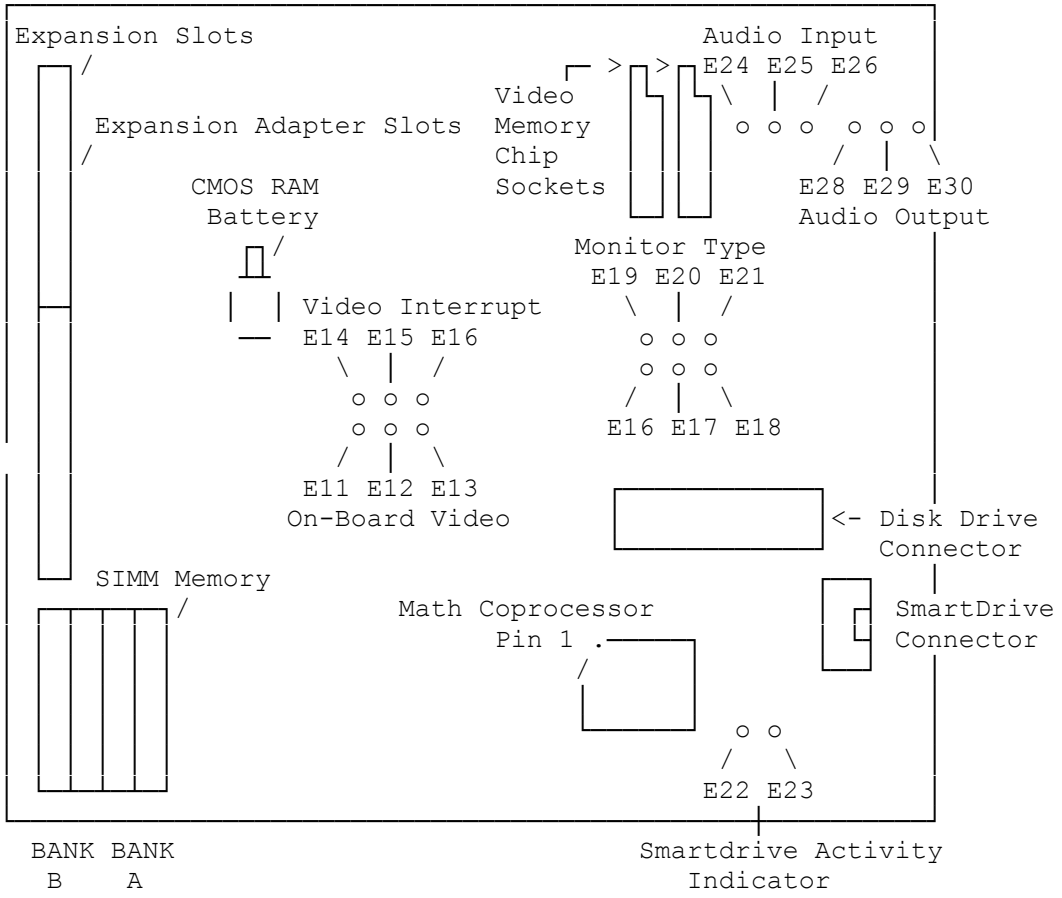
Note: Refer to Faxback Doc. # 1103 for setting this board.